RoHS	This products can apply to the SWB Doc NO. QA-3-04-005 of Environmental&Material Management Rules

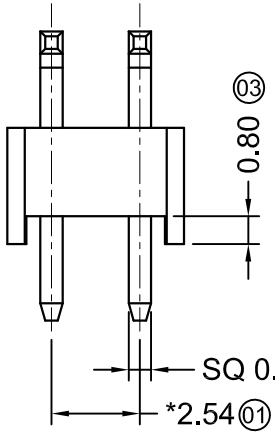

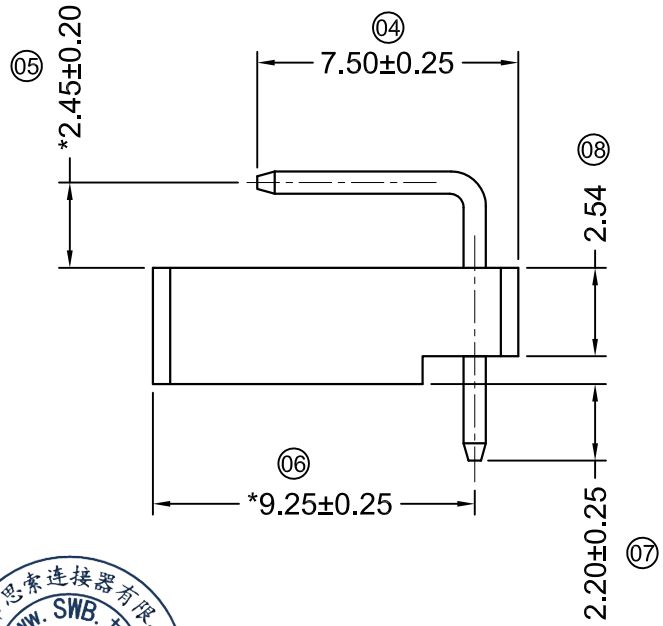

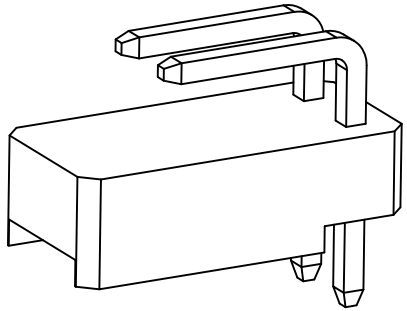

■ Specifications :

- Voltage rating: 250V AC / DC
- Current rating: 3A AC / DC
- Insulation resistance: ≥1000MΩ
- Contact resistance: ≤20mΩ
- Voltage Resistance: 500V AC/minute
- Temperature range: -40℃~+105℃
- After environmental testing: ≤30mΩ
- Material(Pin)：Brass

6501 W R X - 02- 9T SW1 B R -12 Q
① ② ③ ④ ⑤ ⑥ ⑦ ⑧ ⑨ ⑩ ⑪

① Series No.
② Category：W-Wafer
③ Connector Type：R- 90°
④ Mouting Type：Blank-DIP
⑤ Row No.-Pin No Per Row：XX-02P
⑥ Material：9T-PA9T UL94V-0
⑦ Plating Code：SW1-Matte Tin plating 100u"Min. ;50u" Ni Min
⑧ Color：B-Black Color
⑨ Packing: R-Reel
⑩ 12-2.45/3.34/2.2
⑪ Special code：Q-Automotive Connectors

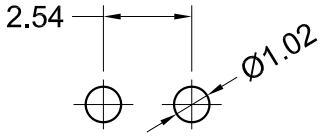

Recommended P.C.B Layout
General Tolerance±0.05

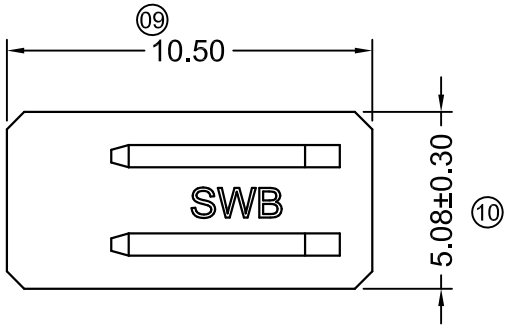

DATE	REV	ECN NO	DESCRIPTION	MODIFY	APPROVAL

GENERAL TOLERANCE
.X ±0.30
.XX ±0.20
.XXX ±0.10
X.° ±2°
PROJECT

东莞市思索连接器有限公司
SWB CONNECTORS CO.,LTD

APPROVAL	CHECK	DRAWN	DATE
Robing	Robing	Susan Liu	2021/5/20

PART NO.
6501WR-02-9TSW1BR-12Q

TITLE
2.54 mm Pin Header connectors

UNIT	SCALE	SHEET	REV	NUMBER
mm	1:1	1/1	A	A-013